Everyday®
Kitchen Storage Accessories

Corner Pull Out

Right Opening Installation

ECPOSB900 I ECPOWB900

STEP : 01

STEP : 05

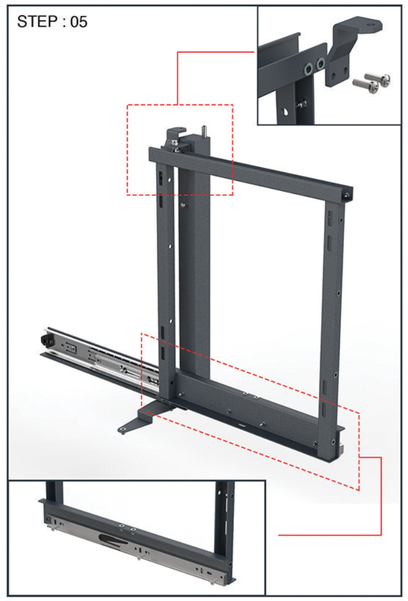

STEP : 08

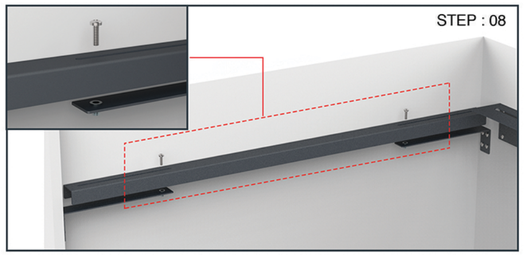

STEP : 09 Fix the back sliding frame

STEP : 10

STEP : 11

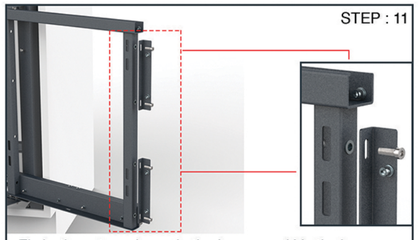

Fix both part as shown in the image and Vertical Adjustment can be done, if needed.

STEP : 12

Fix both part as shown in the image and Horizontal Adjustment can be done, if needed.

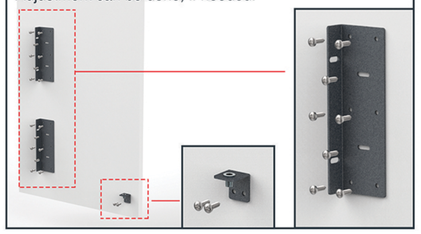

STEP : 13

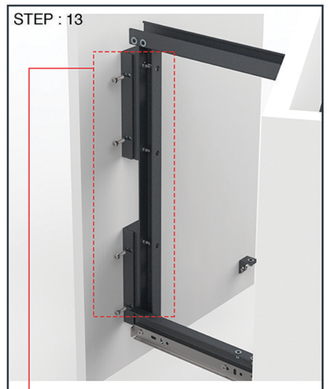

Fix both part as shown in the image and Inside-Outside Adjustment can be done, if needed.

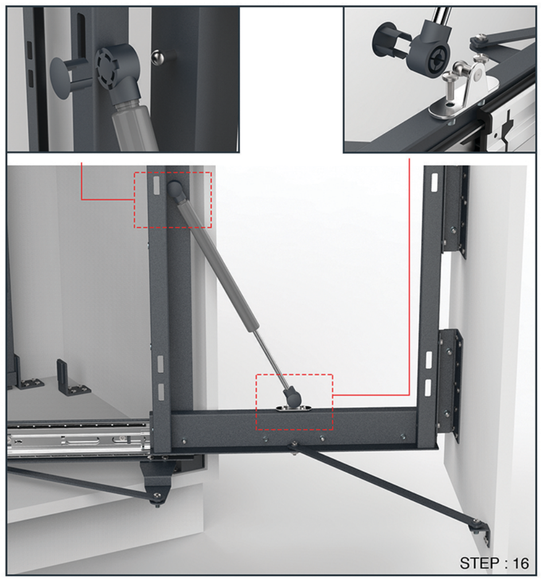

STEP : 16

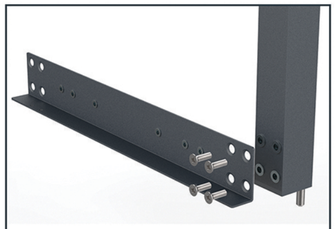

STEP : 02

STEP : 06

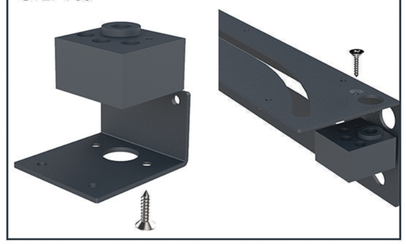

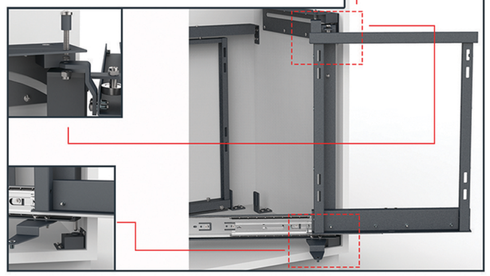

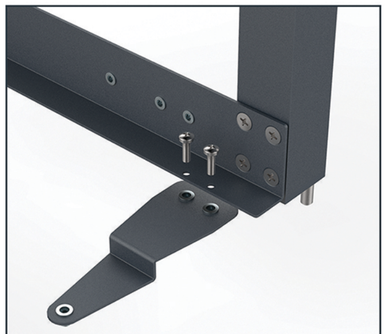

STEP : 03

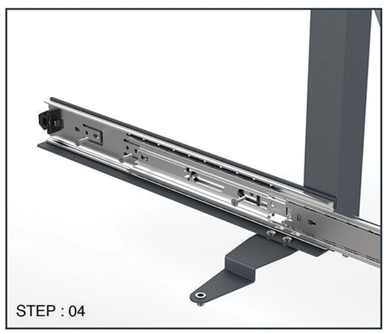

STEP : 04

STEP : 07

Fix all the parts as shown in the image using Bottom & Side Templates

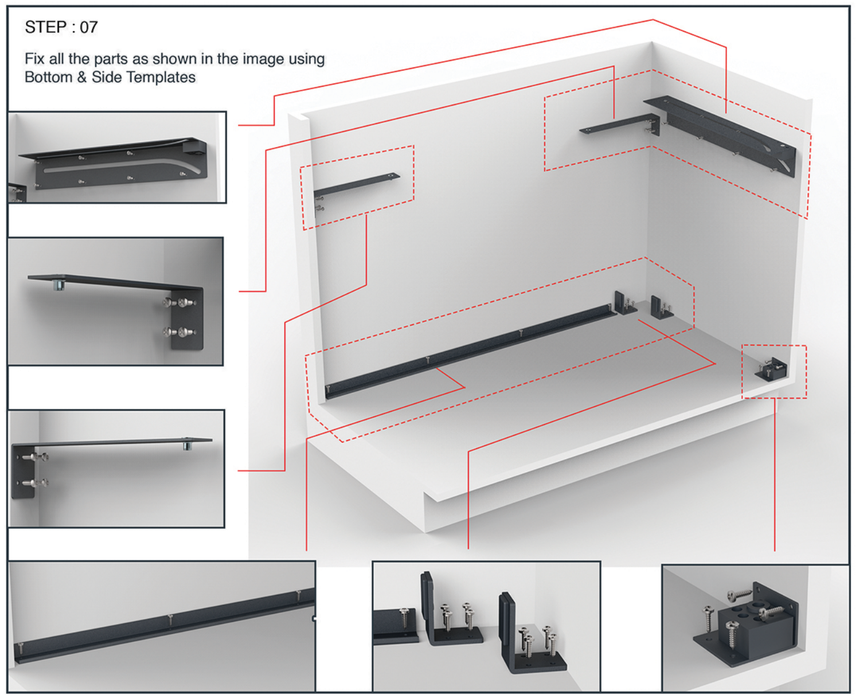

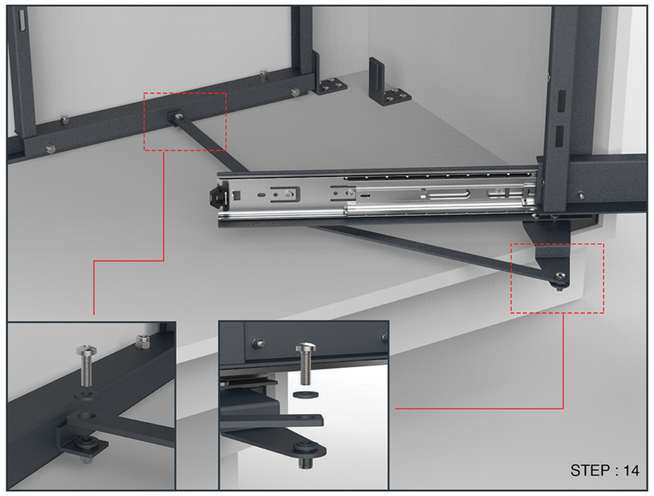

STEP : 14

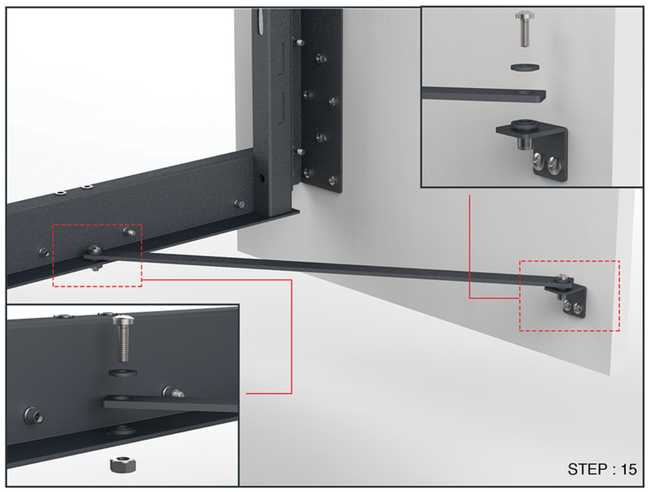

STEP : 15

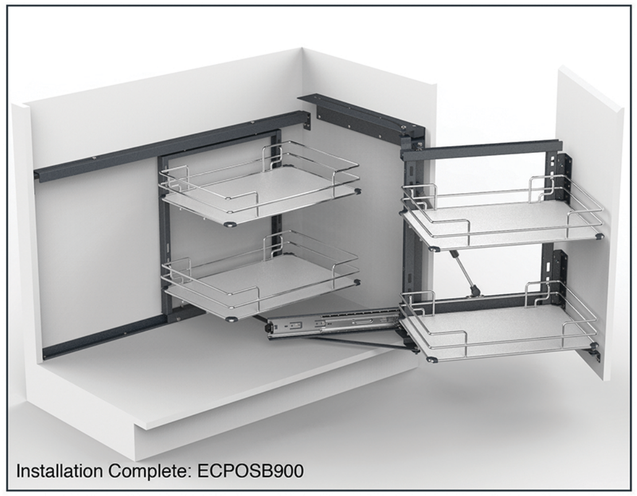

Installation Complete: ECPOSB900

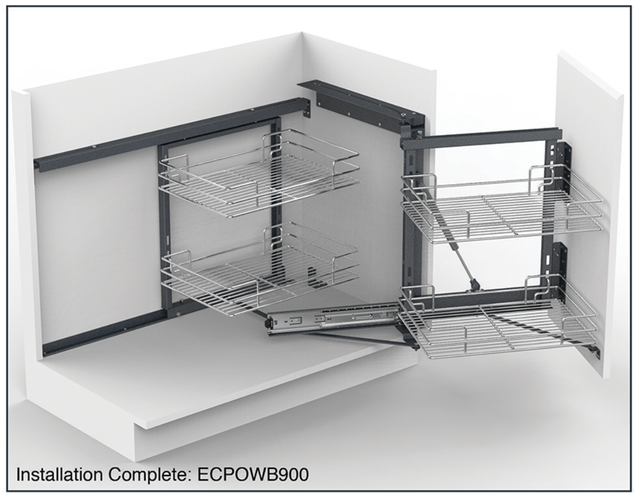

Installation Complete: ECPOWB900